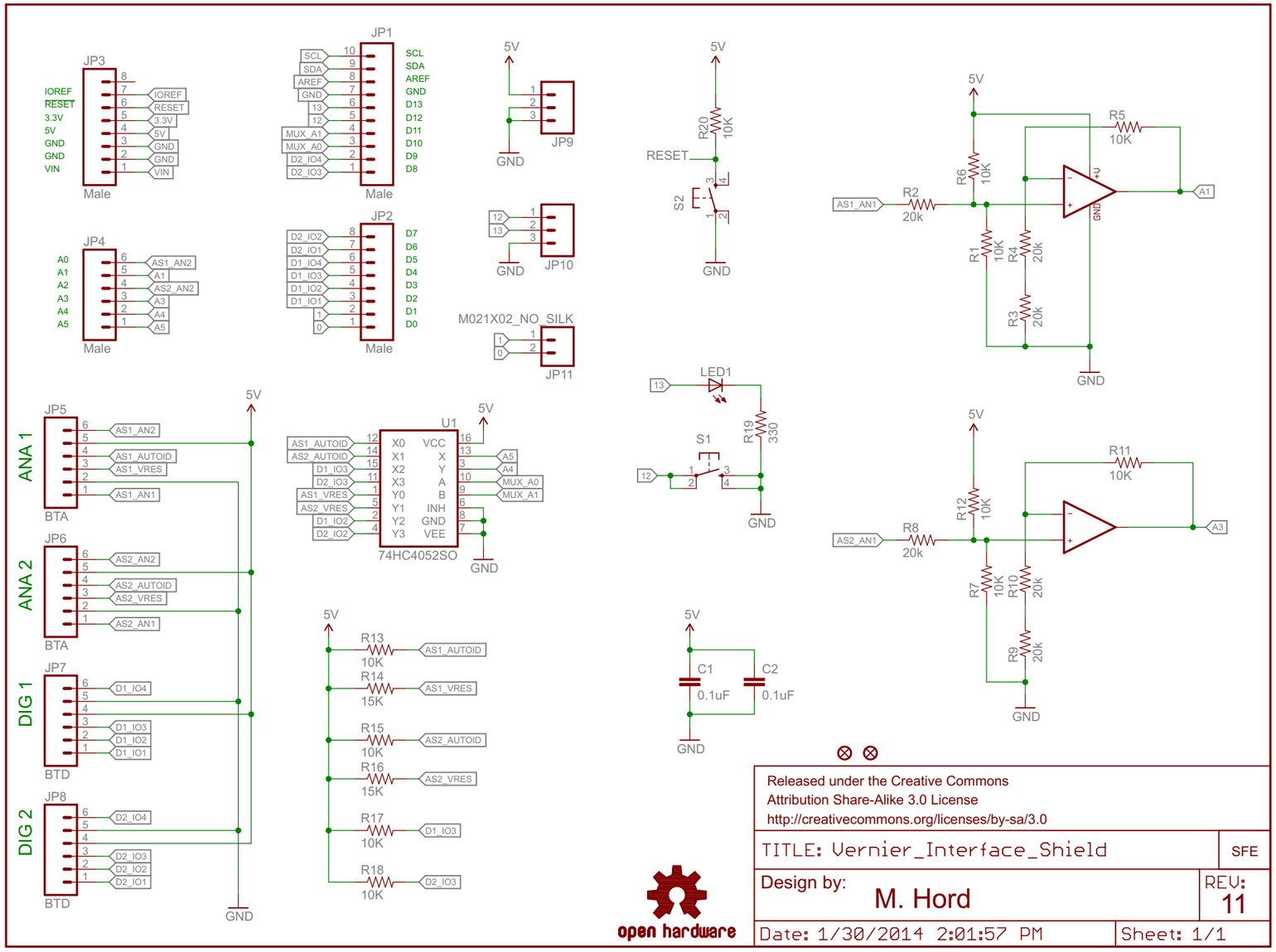

Released under the Creative Commons
Attribution Share-Alike 3.0 License
http://creativecommons.org/licenses/by-sa/3.0

open hardware

TITLE: Vernier_Interface_Shield	SFE
Design by: M. Hord	REV: 11
Date: 1/30/2014 2:01:57 PM	Sheet: 1/1

British Telecom Analog (BTA) - Right Hand

Pin 1 = Sensor output (+/-10V)
Pin 2 = GND
Pin 3 = Vres (resistance reference)
Pin 4 = AutoIDENT (not supported on all sensors)
Pin 5 = Power (+5VDC)
Pin 6 = Sensor output (0-5V)

British Telecom Digital (BTD) - Left Hand

POS.	DEFAULT	MOTION DETECTOR	PHOTOGATE	RAD MONITOR	ROTARY MOTION
1	I\O1	Echo	Input	Countinput	CCWcount
2	I\O2	Init		CWcount	
3	I\O3	AutoID			
4	PWR (5V)	PWR (5V)	PWR (5V)	PWR (5V)	PWR (5V)
5	GND	GND	GND	GND	GND
6	I\O4			X4res	

Falstad circuit Simulation Code
```
$ 1 5.0E-6 10.634267539816555 50 5.0 50
a 368 208 496 208 0 15.0 -15.0 1000000.0
172 176 224 128 224 0 6 5.0 10.0 -10.0 0.0 0.5 Voltage In
O 496 208 544 208 1
r 368 144 496 144 0 10000.0
w 496 144 496 208 0
w 368 144 368 192 0
w 368 192 336 192 0
w 336 192 336 256 0
r 336 256 336 336 0 40000.0
r 272 224 272 336 0 10000.0
w 368 224 272 224 0
w 272 336 304 336 0
w 304 336 336 336 0
g 304 336 304 352 0
r 176 224 240 224 0 20000.0
r 240 224 240 128 0 10000.0
w 272 224 240 224 0
R 240 128 240 80 0 0 40.0 5.0 0.0 0.0 0.5
```